variables/V-color

Micromotors | Coreless DC Motors | SVTN B 01-1320-06-D-WM

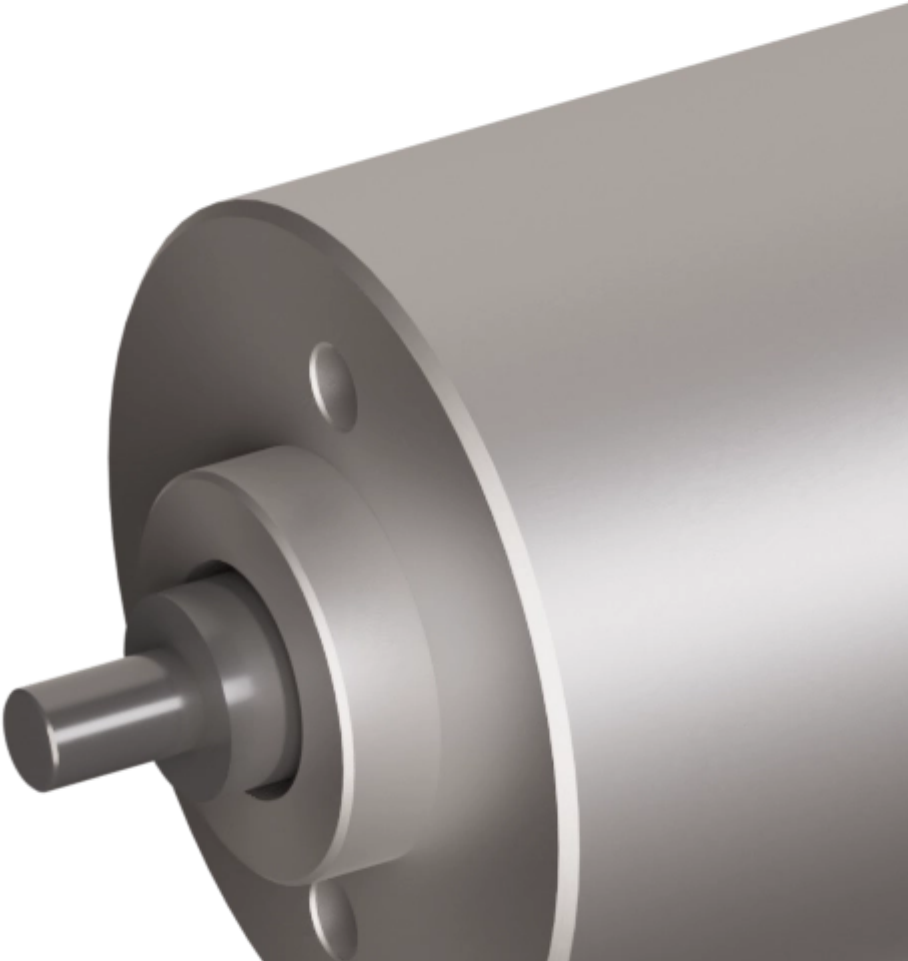

Feature

	SVTN B 01-1320-06-D-WM
Nominal voltage	6 V
No load speed	12000 rpm
No load current	30 mA
Nominal speed	9600 rpm
Nominal torque	1.500 mNm
Nominal current	0.358 A
Stall torque	7.410 mNm
Stall current	1.630 A
Max. efficiency	71.100 %
Terminal resistance*	3.680 ?
Terminal inductance*	0.120 mH
Torque constant	4.660 mNm/A
Speed constant	2000 mNm/V

Notice : The provided technical data are the higher limits recommended in static condition. To obtain the correct dimensioning of the product, it is necessary to hold account of all the applicable dynamic forces, including the inertia of the manipulator, the configuration of the tools and the external forces applied.

2 Pole Brushed DC Motors

	SVTN B 01-1320-06-D-WM
Speed/torque gradient	1620.40 rpm/mNm
Mechanical time constant	4.200 ms

	SVTN B 01-1320-06-D-WM
Rotor inertia	0.250 gcm²

The specific design construction of a coreless DC motor provides several advantages over the traditional, iron core, technology. A first added value it is given by rotor lower mass and inertia, so very rapid acceleration and deceleration rates are possible. Furthermore, the lack of iron reduces "iron losses" to provide higher efficiencies (up to 90 percent) than traditional DC motors. Last, but not least, the coreless design reduces winding inductance, so sparking between the brushes and commutator is reduced, increasing motor life and reducing electromagnetic interference (EMI). Our Coreless DC Motors are available on a wide range of sizes and we can show high flexibility on custom requirements.

Advantages

- Winding technology without metal bodies
- Good heat dissipation and high overload capacity
- Long life expectancy

Benefits

- Light and compact, easy integration
- High reliability
- Good return on investment

pes product engineering services

expertise in connectivity